DRAWING NO. SD015789

REV	DATE	DESCRIPTION	ECO	BY	C'H'K.
N	2020-05-04 01:00:00 EDT	NOTE # 7 INCLUDED IN SHEET 2.	53513	PB	RG

CATALOG NUMBER <5><6>	A: ROD ACCOMMODATED NOMINAL DIAMETER (in)	A: ROD ACCOMMODATED ACTUAL DIAMETER (in)	A: ROD ACCOMMODATED ACTUAL DIAMETER (mm)	A: I.P.S. PIPE ACCOMMODATED NOMINAL DIAMETER (in)	A: I.P.S. PIPE ACCOMMODATED ACTUAL DIAMETER (in)	A: I.P.S. PIPE ACCOMMODATED ACTUAL DIAMETER (mm)	AA: COPPER CONDUCTOR ACCOMMODATED AWG MIN SIZE	AA AWG MIN DIA	AA AWG MAX SIZE	AA AWG MAX DIA	AA METRIC WIRE SIZE MIN SIZE	AA METRIC MIN DIA	AA METRIC MAX SIZE	AA METRIC MAX DIA	B (in)	B (mm)	Y (in)	Y (mm)	J (in)	J (mm)	L (in)	L (mm)	W (in)	W (mm)	"U" BOLT	TORQUE Lb in	TORQUE Nm
GAR114C	0.5	0.5000	[13]	1/4	0.540	[14]	8 sol	0.128	4 str	0.232	$10mm^2$ sol	[3.6]	$16mm^2$ str	[5.1]	1.00	[25]	1.88	[48]	3/8	[10]	1.31	[33]	1.88	[48]	271	240	27.0
GAR1126	0.5	0.5000	[13]	1/4	0.540	[14]	4 sol	0.204	2/0 str	0.419	$25mm^2$ str	[6.5]	$70mm^2$ str	[10.9]	1.00	[25]	1.88	[48]	3/8	[10]	1.56	[40]	1.88	[48]	271	240	27.0
GAR1129	0.5	0.5000	[13]	1/4	0.540	[14]	2/0 sol	0.365	250 Kcmil	0.575	$70mm^2$ str	[10.9]	$120mm^2$ str	[14.4]	1.00	[25]	1.88	[48]	3/8	[10]	1.81	[46]	1.88	[48]	271	240	27.0
GAR644C <7>	0.625-0.75	0.625-0.75	[16]-[19]	3/8	0.675	[17]	8 sol	0.128	4 str	0.232	$10mm^2$ sol	[3.6]	$16mm^2$ str	[5.1]	1.19	[30]	2.06	[52]	3/8	[10]	1.31	[33]	2.06	[52]	269	240	27.0
GAR6426 <7>	0.625-0.75	0.625-0.75	[16]-[19]	3/8	0.675	[17]	4 sol	0.204	2/0 str	0.419	$25mm^2$ str	[6.5]	$70mm^2$ str	[10.9]	1.19	[30]	2.06	[52]	3/8	[10]	1.56	[40]	2.06	[52]	269	240	27.0
GAR6429 <7>	0.625-0.75	0.625-0.75	[16]-[19]	3/8	0.675	[17]	2/0 sol	0.365	250 Kcmil	0.575	$70mm^2$ str	[10.9]	$120mm^2$ str	[14.4]	1.19	[30]	2.06	[52]	3/8	[10]	1.81	[46]	2.06	[52]	269	240	27.0
GAR6434 <7>	0.625-0.75	0.625-0.75	[16]-[19]	3/8	0.675	[17]	300 Kcmil	0.63	500 Kcmil	0.813	$150mm^2$ str	[16.0]	$240mm^2$ str	[20.3]	1.31	[33]	2.56	[65]	1/2	[13]	2.25	[57]	2.44	[62]	254	480	54.1
GAR144C <7>	1.000	1.000	[25]	1/2-3/4	.840-1.050	[21]-[27]	8 sol	0.128	4 str	0.232	$10mm^2$ sol	[3.6]	$16mm^2$ str	[5.1]	1.50	[38]	1.81	[46]	3/8	[10]	1.31	[33]	2.35	[60]	222	240	27.0
GAR1426 <7>	1.000	1.000	[25]	1/2-3/4	.840-1.050	[21]-[27]	4 sol	0.204	2/0 str	0.419	$25mm^2$ str	[6.5]	$70mm^2$ str	[10.9]	1.50	[38]	1.81	[46]	3/8	[10]	1.56	[40]	2.38	[60]	249	240	27.0
GAR1429 <7>	1.000	1.000	[25]	1/2-3/4	.840-1.050	[21]-[27]	2/0 sol	0.365	250 Kcmil	0.575	$70mm^2$ str	[10.9]	$120mm^2$ str	[14.4]	1.50	[38]	2.12	[54]	3/8	[10]	1.81	[46]	2.38	[60]	249	240	27.0
GAR1434 <7>	1.000	1.000	[25]	1/2-3/4	.840-1.050	[21]-[27]	300 Kcmil	0.63	500 Kcmil	0.813	$150mm^2$ str	[16.0]	$240mm^2$ str	[20.3]	1.62	[41]	2.69	[68]	1/2	[13]	2.38	[60]	2.75	[70]	247	480	54.1
GAR154C <7>	1.120-1.31	1.120-1.31	[28]-[33]	1	1.315	[33]	8 sol	0.128	4 str	0.232	$10mm^2$ sol	[3.6]	$16mm^2$ str	[5.1]	1.75	[45]	2.31	[59]	3/8	[10]	1.31	[33]	2.62	[67]	244	240	27.0
GAR1526 <7>	1.120-1.31	1.120-1.31	[28]-[33]	1	1.315	[33]	4 sol	0.204	2/0 str	0.419	$25mm^2$ str	[6.5]	$70mm^2$ str	[10.9]	1.75	[45]	2.31	[59]	3/8	[10]	1.56	[40]	2.62	[67]	244	240	27.0
GAR1529 <7>	1.120-1.31	1.120-1.31	[28]-[33]	1	1.315	[33]	2/0 sol	0.365	250 Kcmil	0.575	$70mm^2$ str	[10.9]	$120mm^2$ str	[14.4]	1.75	[45]	2.31	[59]	3/8	[10]	1.81	[46]	2.62	[67]	244	240	27.0
GAR1534 <7>	1.120-1.31	1.120-1.31	[28]-[33]	1	1.315	[33]	300 Kcmil	0.63	500 Kcmil	0.813	$150mm^2$ str	[16.0]	$240mm^2$ str	[20.3]	1.88	[48]	3.31	[84]	1/2	[13]	2.38	[60]	3.00	[76]	311	480	54.1
GAR164C <7>	1.380-1.66	1.380-1.66	[35]-[42]	1 1/4	1.660	[42]	8 sol	0.128	4 str	0.232	$10mm^2$ sol	[3.6]	$16mm^2$ str	[5.1]	2.06	[52]	2.31	[59]	3/8	[10]	1.31	[33]	3.00	[76]	204	240	27.0
GAR1626 <7>	1.380-1.66	1.380-1.66	[35]-[42]	1 1/4	1.660	[42]	4 sol	0.204	2/0 str	0.419	$25mm^2$ str	[6.5]	$70mm^2$ str	[10.9]	2.06	[52]	2.31	[59]	3/8	[10]	1.56	[40]	3.00	[76]	204	240	27.0
GAR1629 <7>	1.380-1.66	1.380-1.66	[35]-[42]	1 1/4	1.660	[42]	2/0 sol	0.365	250 Kcmil	0.575	$70mm^2$ str	[10.9]	$120mm^2$ str	[14.4]	2.06	[52]	2.31	[59]	3/8	[10]	1.51	[38]	3.00	[76]	204	240	27.0
GAR1634 <7>	1.380-1.66	1.380-1.66	[35]-[42]	1 1/4	1.660	[42]	300 Kcmil	0.63	500 Kcmil	0.813	$150mm^2$ str	[16.0]	$240mm^2$ str	[20.3]	2.22	[56]	3.19	[81]	1/2	[13]	2.38	[60]	3.38	[86]	423	480	54.1
GAR1639	1.380-1.66	1.380-1.66	[35]-[42]	1 1/4	1.660	[42]	550 Kcmil	0.85	750 Kcmil	0.998	$300mm^2$ str	[22.6]	$300mm^2$ str	[22.6]	2.31	[59]	3.56	[90]	1/2	[13]	2.75	[70]	3.75	[95]	359	480	54.1
GAR174C	1.620-1.90	1.620-1.90	[41]-[48]	1 1/2	1.900	[48]	8 sol	0.128	4 str	0.232	$10mm^2$ sol	[3.6]	$16mm^2$ str	[5.1]	2.34	[59]	2.69	[68]	3/8	[10]	1.31	[33]	3.25	[83]	268	240	27.0
GAR1726	1.620-1.90	1.620-1.90	[41]-[48]	1 1/2	1.900	[48]	4 sol	0.204	2/0 str	0.419	$25mm^2$ str	[6.5]	$70mm^2$ str	[10.9]	2.34	[59]	2.69	[68]	3/8	[10]	1.56	[40]	3.25	[83]	268	240	27.0
GAR1729	1.620-1.90	1.620-1.90	[41]-[48]	1 1/2	1.900	[48]	2/0 sol	0.365	250 Kcmil	0.575	$70mm^2$ str	[10.9]	$120mm^2$ str	[14.4]	2.34	[59]	2.69	[68]	3/8	[10]	1.81	[46]	3.25	[83]	268	240	27.0
GAR1734	1.620-1.90	1.620-1.90	[41]-[48]	1 1/2	1.900	[48]	300 Kcmil	0.63	500 Kcmil	0.813	$150mm^2$ str	[16.0]	$240mm^2$ str	[20.3]	2.47	[63]	3.19	[81]	1/2	[13]	2.38	[60]	3.62	[97]	302	480	54.1
GAR184C	2.000-2.38	2.000-2.38	[51]-[60]	2	2.375	[60]	8 sol	0.128	4 str	0.232	$10mm^2$ sol	[3.6]	$16mm^2$ str	[5.1]	2.81	[71]	2.62	[67]	3/8	[10]	1.31	[33]	3.69	[94]	257	240	27.0
GAR1826	2.000-2.38	2.000-2.38	[51]-[60]	2	2.375	[60]	4 sol	0.204	2/0 str	0.419	$25mm^2$ str	[6.5]	$70mm^2$ str	[10.9]	2.81	[71]	2.62	[67]	3/8	[10]	1.56	[40]	3.69	[94]	257	240	27.0
GAR1829	2.000-2.38	2.000-2.38	[51]-[60]	2	2.375	[60]	2/0 sol	0.365	250 Kcmil	0.575	$70mm^2$ str	[10.9]	$120mm^2$ str	[14.4]	2.81	[71]	2.62	[67]	3/8	[10]	1.81	[46]	3.69	[94]	310	240	27.0
GAR1834	2.000-2.38	2.000-2.38	[51]-[60]	2	2.375	[60]	300 Kcmil	0.63	500 Kcmil	0.813	$150mm^2$ str	[16.0]	$240mm^2$ str	[20.3]	2.94	[75]	3.62	[92]	1/2	[13]	2.38	[60]	4.06	[103]	260	480	54.1
GAR1839	2.000-2.38	2.000-2.38	[51]-[60]	2	2.375	[60]	550 Kcmil	0.85	750 Kcmil	0.998	$300mm^2$ str	[22.6]	$300mm^2$ str	[22.6]	3.06	[78]	3.80	[97]	5/8	[16]	2.75	[70]	4.44	[113]	358	355	74.4
GAR194C	2.500-2.88	2.500-2.88	[64]-[73]	2 1/2	2.875	[73]	8 sol	0.128	4 str	0.232	$10mm^2$ sol	[3.6]	$16mm^2$ str	[5.1]	3.31	[84]	3.19	[81]	3/8	[10]	1.31	[33]	4.19	[106]	266	240	27.0

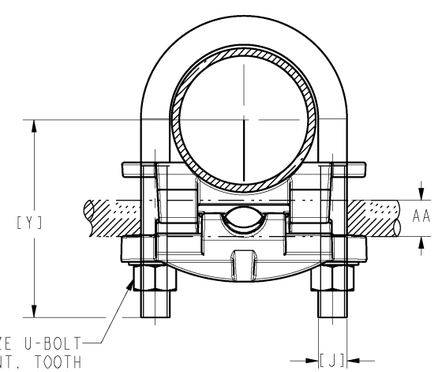

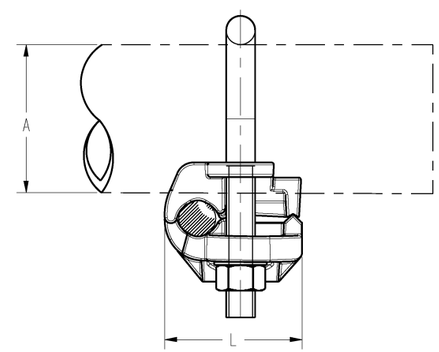

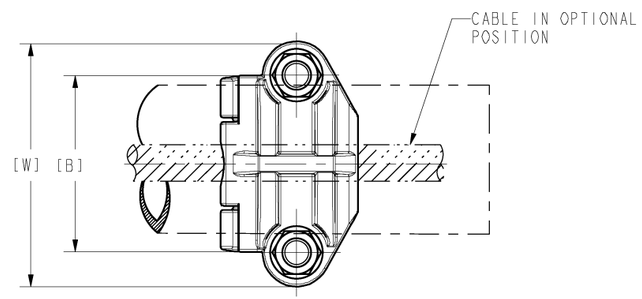

NOTES:

1. MATERIAL: CAST COPPER ALLOY.
2. FINISH: BRIGHT DIPPED.
3. UL 467 LISTED FILE NO. E9999, ACCEPTABLE FOR DIRECT BURIAL IN EARTH AND CONCRETE. CSA 22.2 NO 65 LISTED. FILE NO. 42862.
4. DIMENSIONS IN BRACKETS [ ] ARE IN MILLIMETERS, ROUNDED OFF TO THE NEAREST MILLIMETER, UNLESS OTHERWISE NOTED, AND ARE FOR REFERENCE ONLY.

<5> ADD SUFFIX "TN" TO THESE CATALOG NUMBERS FOR TIN-PLATED VERSIONS. (HARDWARE NOT TIN PLATED).

<6> ADD SUFFIX "W" TO THESE CATALOG NUMBERS FOR TIN PLATED BODIES AND HARDWARE. HARDWARE TO BE ELECTRO-TIN PLATED.

<7> FOR CABLE-TO-REBAR SEE SHEET 4.

TO ORDER BURNDY® PRODUCTS CALL

UNITED STATES
1-800-346-4175 (LONDONDERRY, NH)

CANADA:
1-800-361-6975 (QUEBEC)
1-800-387-6487 (ALL OTHER PROVINCES)

FOR PRODUCT INFO: http://www.burndy.com

GROUND CLAMP - CABLE TO REBAR

ITEM NO:	N/A	
CAT. NO:	GAR-- (TABLE)	
DRAWN BY:	B.K.	01/21/09
CHECKER:	G.H.G	01/21/09
DSN APPVL:	T REYNOLDS	10/18/12
MFG APPVL:	--	--
QA APPVL:	J HILLMAN	10/22/12
MKT APPVL:	P THERRIEN	10/19/12
PROD FAM:	MECHANICAL GROUNDING	
PROJECT #:	--	
DOCUMENT TYPE:	Sales	
REL LEVEL:	Released	

BURNDY

SCALE: 1:1

SIZE	DRAWING NO	REV
D	SD015789	N
	SHEET 1 OF 4	

REV: PE0200

REV	DATE	DESCRIPTION	ECO	BY	C'H'K.
N	2020-05-04 01:00:00 EDT	NOTE # 7 INCLUDED IN SHEET 2.	53513	PB	RG

CATALOG NUMBER	CONDUCTOR			
	TUBE I.P.S.	ROD SIZE or O.D. RANGE	REBAR SIZE	CABLE
GAR114C	1/4	1/2	--	8 SOL.-4 STR.
GAR1126				4 SOL.-2/0 STR.
GAR1129				2/0 SOL.-250
GAR644C	3/8	5/8 - 3/4	#5 (5/8")-#6 (3/4")	8 SOL.-4 STR.
GAR6426				4 SOL.-2/0 STR.
GAR6429				2/0 SOL.-250
GAR6434				300-500
GAR144C	1/2 - 3/4	7/8 - 1	#7 (7/8")-#8 (1")	8 SOL.-4 STR.
GAR1426				4 SOL.-2/0 STR.
GAR1429				2/0 SOL.-250
GAR1434				300-500
GAR154C	1	1-1/8 - 1-1/4	#9 (1-1/8")-#10 (1-1/4")	8 SOL.-4 STR.
GAR1526				4 SOL.-2/0 STR.
GAR1529				2/0 SOL.-250
GAR1534				300-500
GAR164C	1-1/4	1-3/8 - 1-1/2	#11 (1-3/8")	8 SOL.-4 STR.
GAR1626				4 SOL.-2/0 STR.
GAR1629				2/0 SOL.-250
GAR1634				300-500

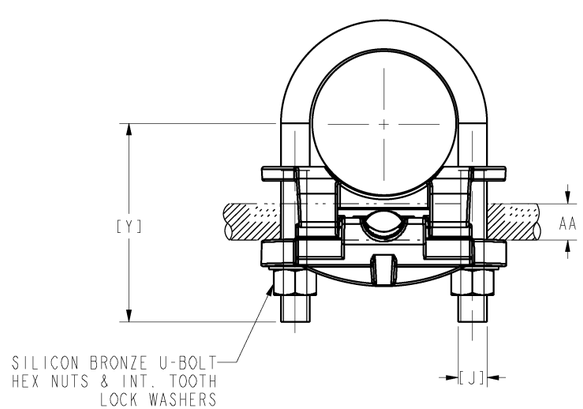

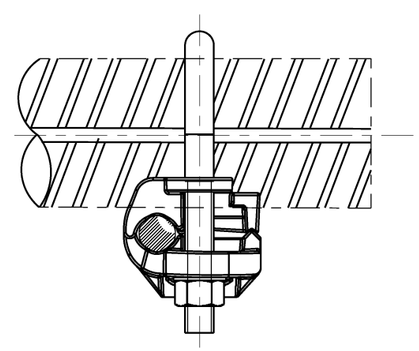

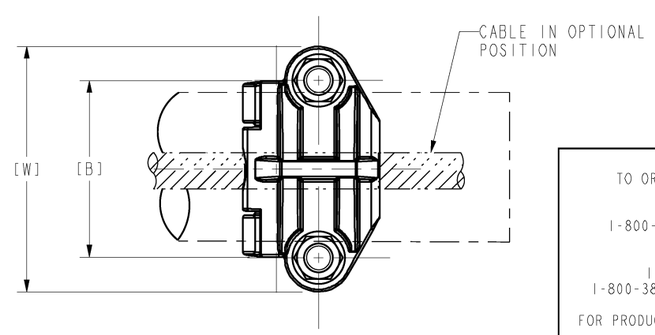

NOTES:

1. MATERIAL: CAST COPPER ALLOY
2. FINISH: BRIGHT DIPPED.
3. UL467 LISTED FILE NO. E9999
   ACCEPTABLE FOR DIRECT BURIAL IN EARTH AND CONCRETE.
   CSA 22.2 NO 65 LISTED. FILE NO. 42862.
4. SEE SHEET 1 OF 4 FOR DIMENSIONS.
5. ADD SUFFIX "TN" TO THESE CATALOG NUMBERS FOR TIN PLATED VERSIONS (HARDWARE NOT TIN PLATED).
6. ADD SUFFIX "W" TO THESE CATALOG NUMBERS FOR TIN PLATED BODIES AND HARDWARE. HARDWARE TO BE ELECTRO-TIN PLATED.

TO ORDER BURNDY® PRODUCTS CALL

UNITED STATES
1-800-346-4175 (LONDONDERRY, NH)

CANADA:
1-800-361-6975 (QUEBEC)
1-800-387-6487 (ALL OTHER PROVINCES)

FOR PRODUCT INFO: http://www.burndy.com

GROUND CLAMP - CABLE TO REBAR

ITEM NO:	N/A	
CAT. NO:	GAR-- (TABLE)	
DRAWN BY:	B.K.	01/21/09
CHECKER:	G.H.G	01/21/09
DSN APPVL:	T REYNOLDS	10/18/12
MFG APPVL:	--	--
QA APPVL:	J HILLMAN	10/22/12
MKT APPVL:	P THERRIEN	10/19/12
PROD FAM:	MECHANICAL GROUNDING	
PROJECT #:	--	
DOCUMENT TYPE:	Sales	
REL LEVEL:	Released	

BURNDY

SCALE: 1:1

SIZE	DRAWING NO	REV
D	SD015789	N
	SHEET 4 OF 4	

REV: PE0200